MAGNI
TELESCOPIC HANDLERS

RTH 5.23

CONSTRUCTION

LOGISTICS

EVENTS AND FILM

CAB
Best-in-class
safety and visibility

PERFORMANCE
Unrivalled lifting
performance

LOAD LIVE DIAGRAM
Three real-time dynamic
load charts

RTH 5.23

DIMENSIONS (mm)

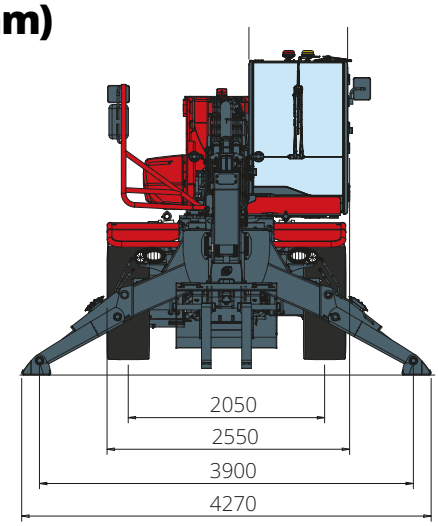

FRONT view

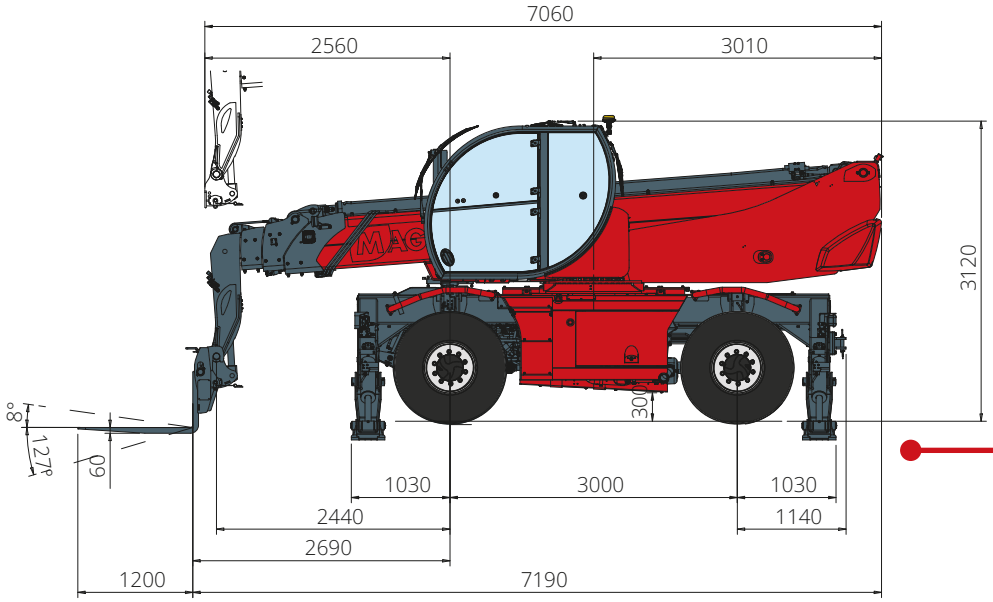

SIDE view

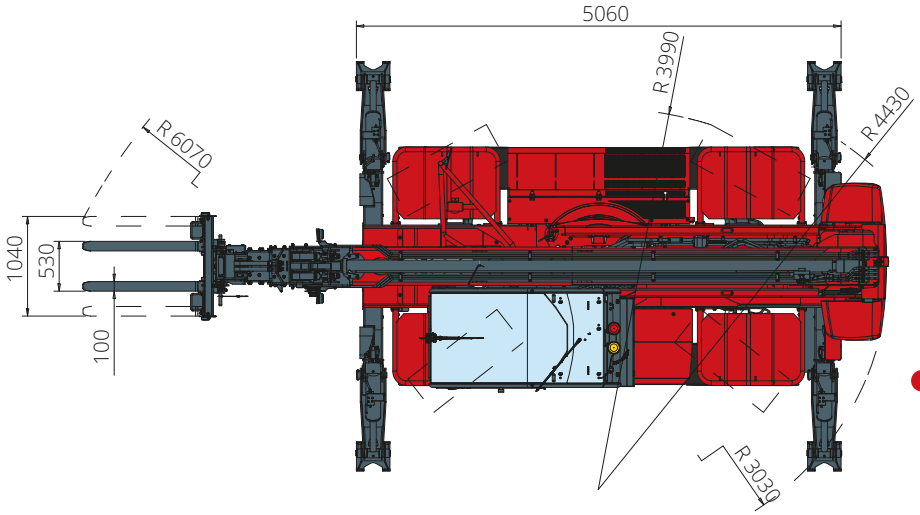

TOP view

Load chart with

FULLY EXTENDED STABILISERS (360°)

ATT - 03 - 001

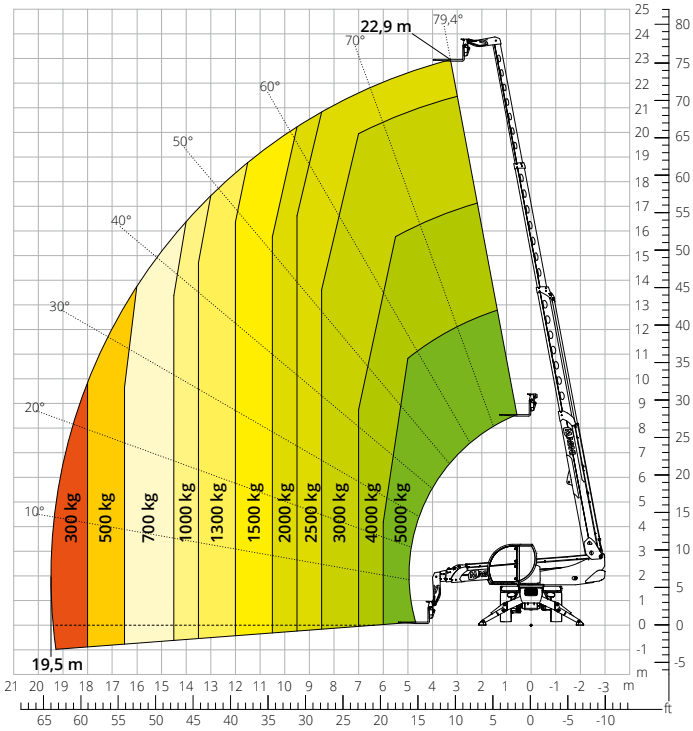

Load chart

FRONT ATTACHMENT ON TYRES

ATT - 03 - 001

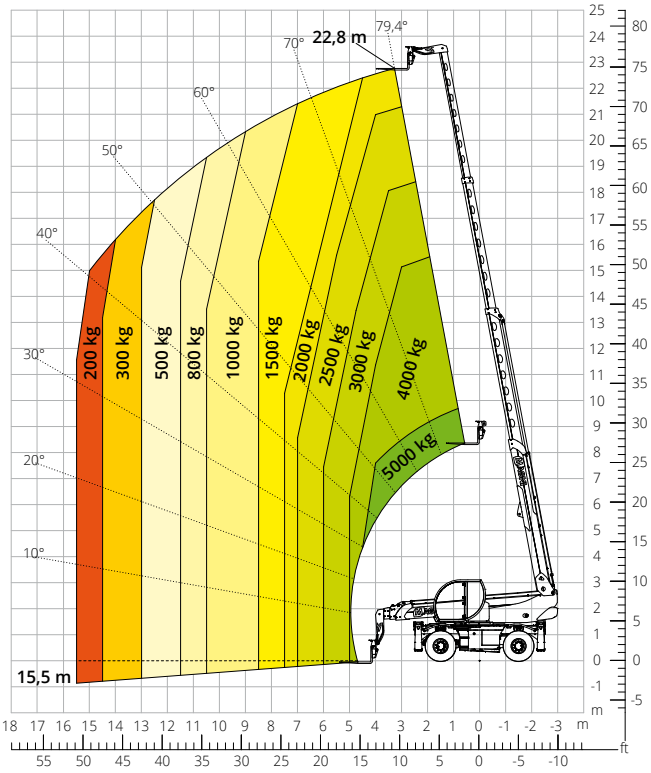

Load chart with

WINCH 3,500 kg

ATT - 02 - 002

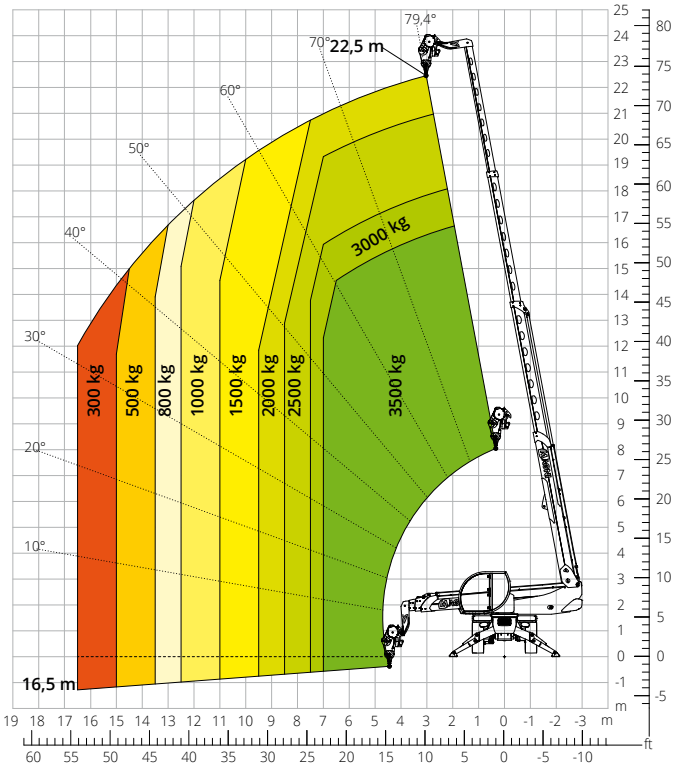

Load chart with

WINCH 5,000 kg

ATT - 02 - 019

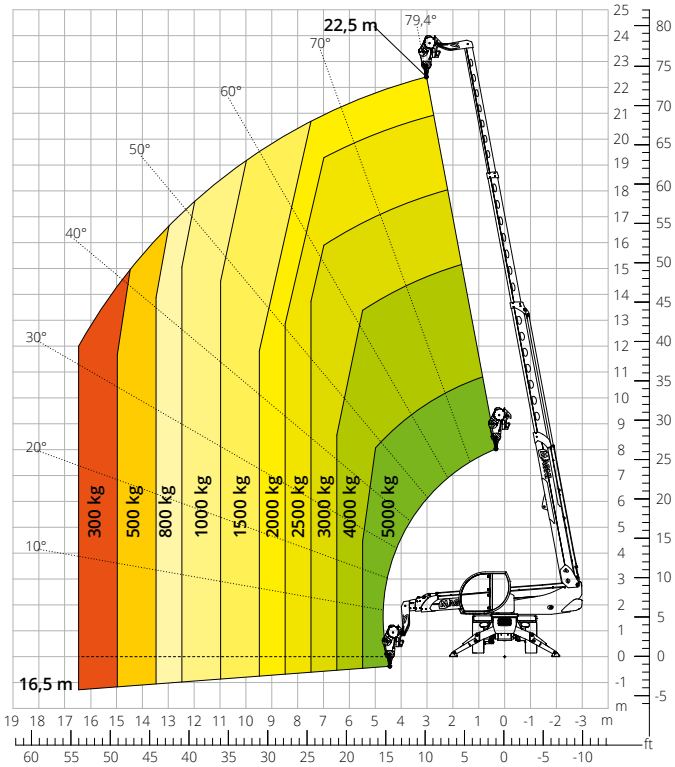

Load chart with

JIB WITH WINCH 800 kg

ATT - 04 - 005

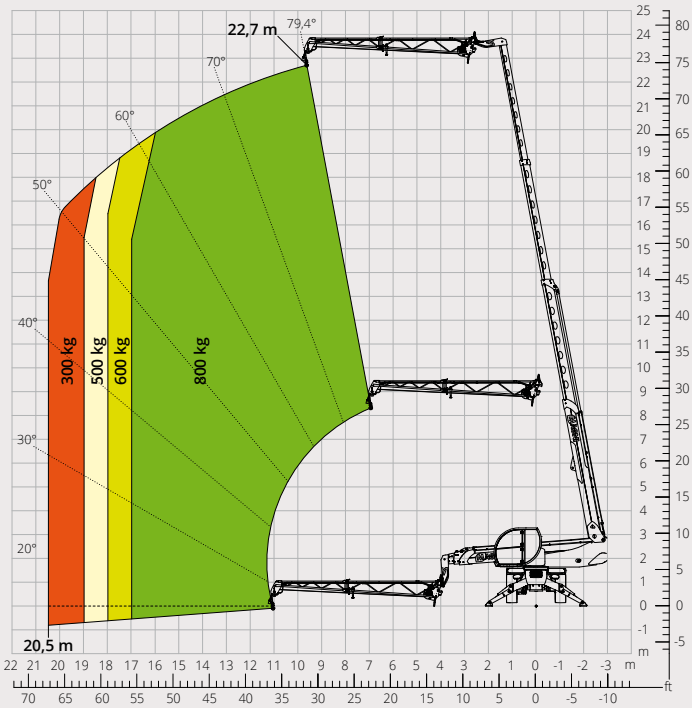

Load chart with

JIB WITH WINCH 1,500 kg

ATT - 04 - 011

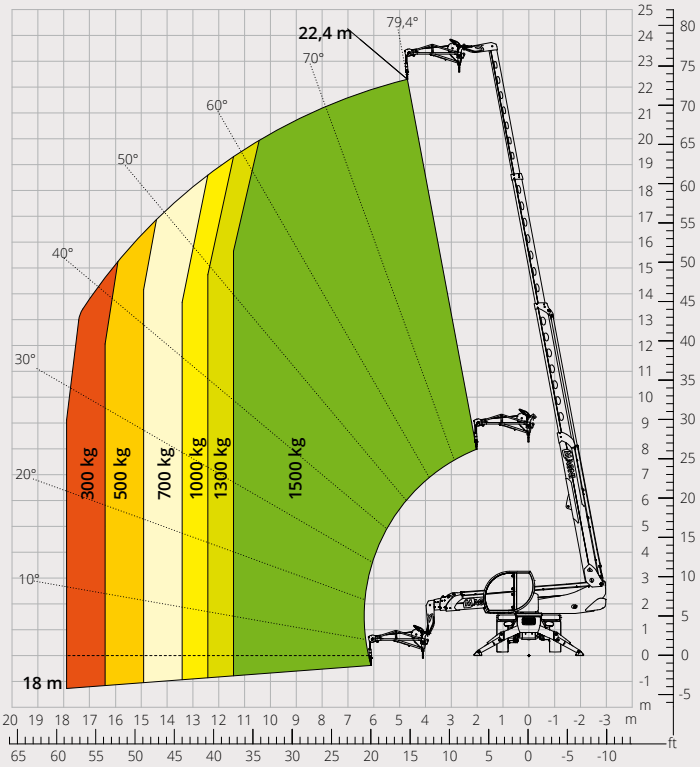

Load chart with

JIB WITH WINCH 2,000 kg

ATT - 04 - 015

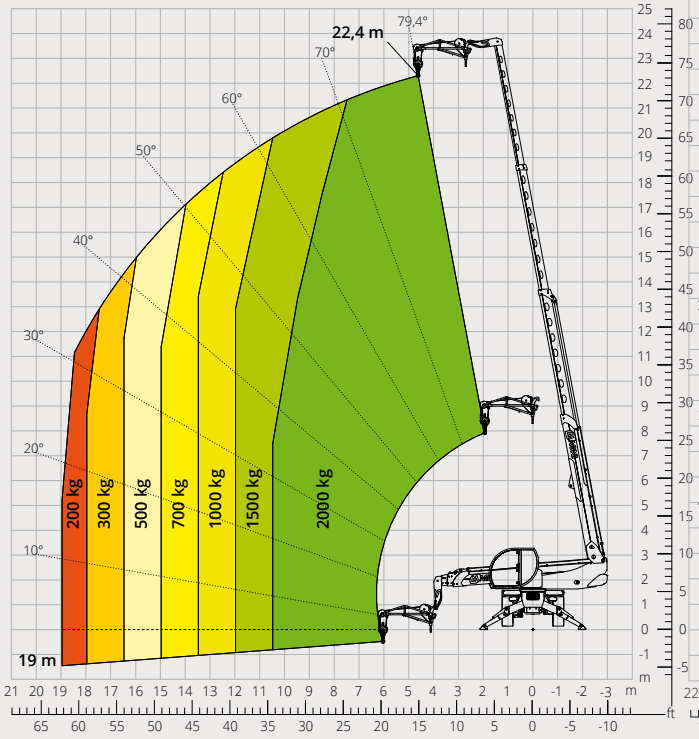

Load chart with

JIB, 600 kg

ATT - 04 - 001

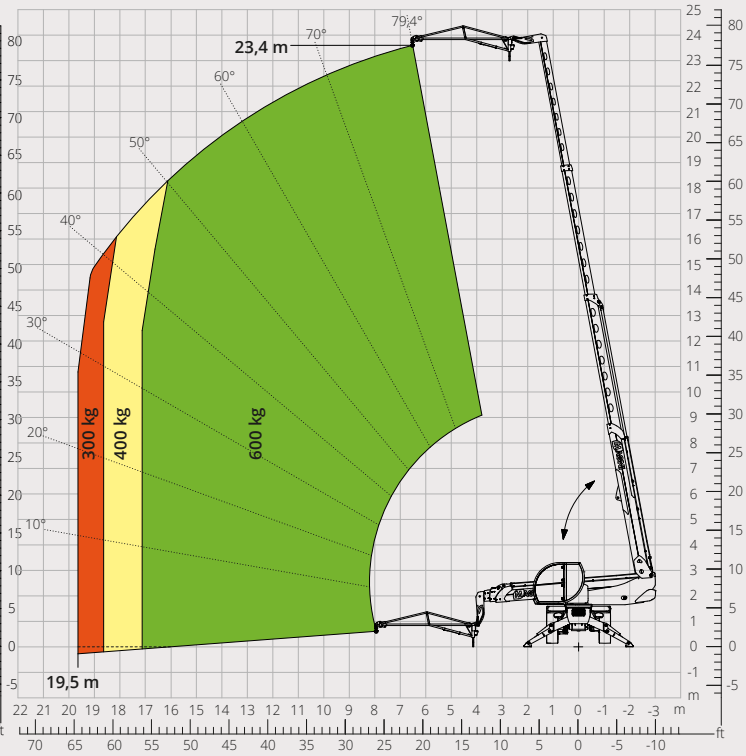

Load chart with
HOOK 5,000 kg
ATT - 05 - 014

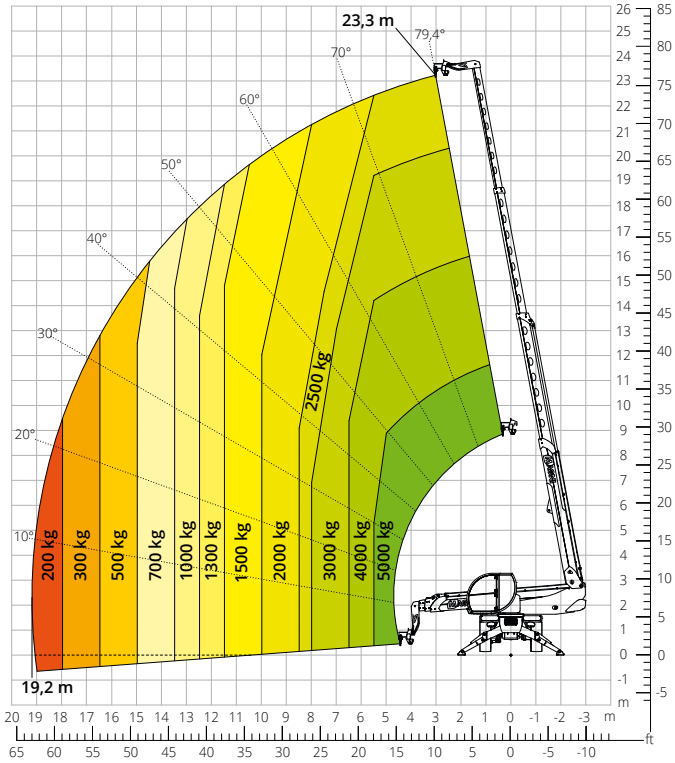

Load chart with
ROTATING EXTENDABLE PLATFORM 500 kg
ATT - 01 - 007

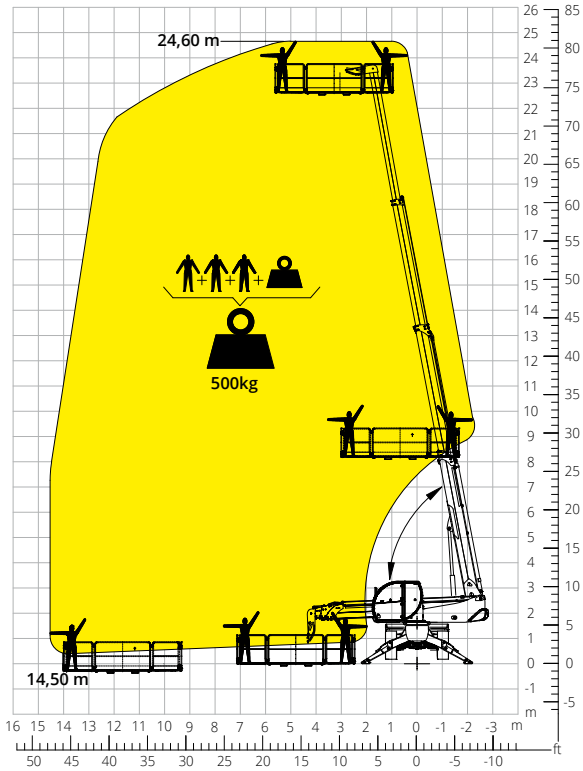

Load chart with
ROTATING EXTENDABLE PLATFORM 1,000 kg
ATT - 01 - 016

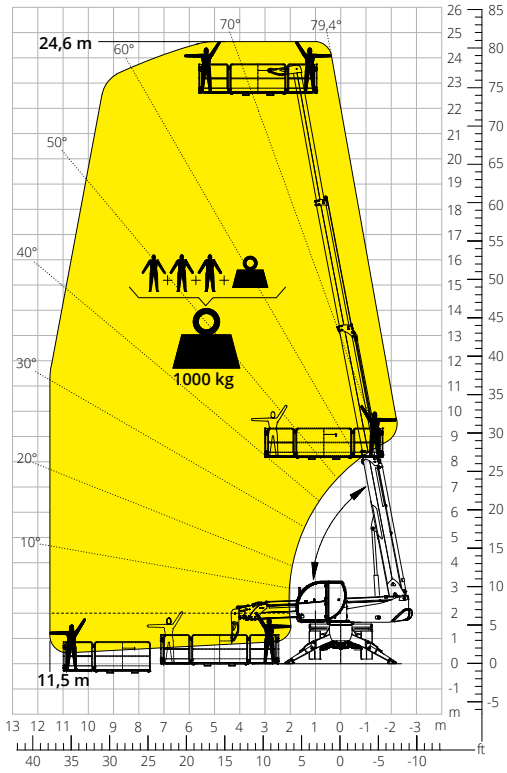

Load chart with
EXTENDABLE PLATFORM FOR ROOFS, 1,000 kg
ATT - 01 - 020

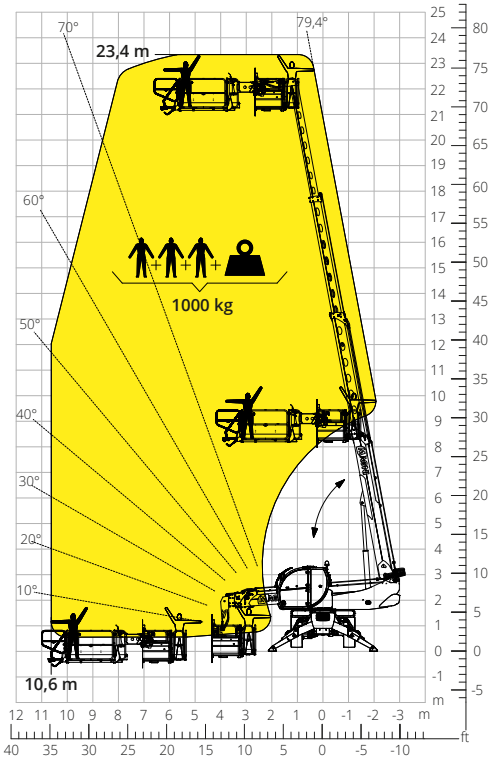

Machine model	Rotating telescopic handler	RTH 5.23	
	Maximum lifting capacity	5,000 kg	
	Maximum lifting height	22.90 m	
	Maximum reach	19.50 m	
	Rotation	360° (continuous)	
Stabilisers	Type	Pivoting	
Engine	Model	**Deutz TCD 3,6 L4 EDG Stage IIIA**	**Deutz TCD 3,6 L4 Stage V**
	Rated power	100 kW (136 hp) at 2,200 rpm	
	Maximum torque	500 Nm at 1,600 rpm	500 Nm at 1,600 rpm
	Displacement	3,6 l	
	Cylinders	4 in line	
	Engine type	Turbocharged direct injection diesel	
	Cooling system	Water – intercooler	
Transmission	Type	Hydrostatic	
	Maximum pressure	480 bar	
	Gearbox	Dropbox, 2 speeds forward-reverse	
Axles and brakes	Type	Axles with planetary gearboxes	
	Front axle	Oscillating and steering with levelling, +/-8°	
	Rear axle	Oscillating and steering with hydraulic lock	
	No. of driving/steering wheels	4WD - 4WS	
	Steering mode	Frontal/Concentric/Crab	
	Service brake	Wet multi-disk on front and rear axle	
	Parking brake	Hydraulic with negative action on front axle	
	Tyre sizes	445/65 R22.5	
Performance	Max. travel speed	40 km/h	
	Gradeability (unladen)	43%	
	Turning radius (at forks)	6,070 mm	
Weights	Total unladen*	16,400 kg	
Tank and system capacities	Diesel fuel	175 l	175 l
	AdBlue	-	10 l
	Hydraulic fluid	107 l	107 l
	Engine oil	9 l	9 l
	Coolant	20 l	20 l
Hydraulic circuit for movements	Circuit type	Load sensing	
	Service pump	Variable displacement	
	Max. hydraulic flow rate	105 l/min	
	Max. boom head flow rate	75 l/min	
	Max. working pressure	350 bar	
	Distributor for boom and turret movements	SIL 2 electro-proportional valve	
	Movements control	Dual joystick with integrated manoeuvre enable	
Standards met	2006/42/EC: EU Machinery Directive 2016/1628: EU Regulation on the emissions of stage V engines EN 1459-X: Relating to standards on the safety requirements for variable reach machines EN 280-1/EN 280-2: standards relating to mobile elevating work platforms (if available) ROPS/level 2 FOPS: relating to the standards for protective structures		

The data given in this brochure are provided for information purposes and are subject to change without prior notice.
All images are purely guideline and might not give an exact representation of the product.
**the stated weight refers to the vehicle unladen with standard equipment and may vary depending on the chosen configuration.*

The standard machine configuration includes:

CAB

"Easy access" system
Comfort seat
Adjustable steering column
Analogue joypad
Adjustable sunblind
Heating
Air conditioning
FM/AM radio with USB and Bluetooth connectivity
Ambient LED lights
USB Type-A and Type-C (5 V) inputs

REAL TIME INFORMATION

Touchscreen, 7"
MCTS – Magni Combi Touch System on-board software
Automatic RFID tools recognition system
LMI – Load Moment Indicator
LLD – Live Load Diagram
Onboard and remote integrated diagnostics
Reversing camera with image integrated in the MCTS

TECHNICAL SPECIFICATIONS

Q-Fit standard
Provision for platform
Advanced three-line CAN BUS system
Automatic levelling system for outriggers
Automatic front and rear wheel alignment
Standard turret rotation motor
Automatic parking brake
Mechanical battery cut-off in engine compartment
Electrical system: 24 V – IP67

SERVICE

MyMagni by Trackunit connectivity system (Free of charge on request)
Warranty: 24 months/2,000 hours